564 Cleanface (SS) GSR2 Fireplace

Owner's Manual

TRAVIS INDUSTRIES
HOUSE OF FIRE

⚠ WARNING:
If the information in these instructions is not followed exactly, a fire or explosion may result causing property damage, personal injury or loss of life.

- Do not store or use gasoline or other flammable vapors and liquids in the vicinity of this or any other appliance.
- **WHAT TO DO IF YOU SMELL GAS**
  - Do not try to light any appliance.
  - Do not touch any electrical switch; do not use any phone in your building.
  - Immediately call your gas supplier from a neighbor's phone. Follow the gas supplier's instructions.
  - If you cannot reach your gas supplier, call the fire department.
- Installation and service must be performed by a qualified installer, service agency or the gas supplier.

HOT GLASS WILL CAUSE BURNS

DO NOT TOUCH GLASS UNTIL COOLED

NEVER ALLOW CHILDREN TO TOUCH GLASS

A barrier designed to reduce the risk of burns from the hot viewing glass is provided with this appliance and shall be installed for the protection of children and other at-risk individuals.

Tested and Listed by

Intertek

ANSI Z21.88-2014
CSA 2.33-2014

- **Built-In Direct Vent Fireplace**
- **Natural Gas or Propane**
- **Residential or Mobile Home**

This appliance may be installed in an aftermarket, permanently located, manufactured home (USA only) or mobile home, where not prohibited by local codes.

This appliance is only for use with the type of gas indicated on the rating plate. A conversion kit is supplied with the appliance.

INSTALLER: Leave this manual with the appliance.

CONSUMER: Retain this manual for future reference.

Travis Industries, Inc. 12521 Harbour Reach Dr., Mukilteo, WA 98275 www.travisproducts.com
© Copyright 2015, T.I.
$10.00 4141209 100-01379

2 Introduction

Introduction

We welcome you as a new owner of a 564 TRV GSR2 gas fireplace. This manual details operation and maintenance of this fireplace. Please familiarize yourself with the Owner's Manual before operating your heater and save the manual for future reference.

Important Information

No other 564 TRV GSR2 gas fireplace has the same serial number as yours. The serial number is on the listing label that is chained to the gas control valve. This serial number may be needed in case you require service.

Model: 564 Cleanface (SS) GSR2

Serial Number: _____

Purchase Date: _____

Purchased From: _____

_____

_____

Register your warranty online at:

traviswarranty.com

Or, mail your warranty card to:

Travis Industries House of Fire
12521 Harbour Reach Drive
Mukilteo, WA 98275

Save Your Bill of Sale.

To receive full warranty coverage, you will need to show evidence of the date you purchased your heater. Do not mail your Bill of Sale to us.

We suggest that you attach your Bill of Sale to this page so that you will have all the information you need in one place should the need for service or information occur.

Installation Warnings

- **Installation requirements are printed in the 564 Cleanface GSR2 Installation Manual (part # 100-01378). All requirements in the installation manual must be met.**
- **Failure to follow all of the requirements may result in property damage, bodily injury, or even death.**
- **This heater must be installed by a qualified installer who has gone through a training program for the installation of direct vent gas appliances.**
- **This appliance must be installed in accordance with all local codes, if any; if not, follow ANSI Z223.1 and NFPA 54(88).**
- **In Manufactured or Mobile Homes must conform with Manufactured Home Construction and Safety Standard, Title 24 CFR, Part 3280, or, when such a standard is not applicable, the Standard for Manufactured Home Installations, ANSI/NCSBCS A225.1. This appliance may be installed in Manufactured Housing only after the home is site located.**
- **The fireplace is designed to operate on natural gas, or propane (LP).**
- **All exhaust gases must be vented outside the structure of the living-area. Combustion air is drawn from outside the living-area structure.**
- **Notify your insurance company before hooking up this fireplace.**

Table of Contents

Introduction 2
Important Information 2
Installation Warnings 2
Table of Contents 3
Features 3
Heating Specifications 3
Before You Begin 6
Remote Control Warnings 6
Remote Set-Up **..... 7**
Verify the Switch is on “REMOTE” 7
Synchronize the Transmitter to the IFC 7
Clearing the System Memory 7
Location of Controls 8
Direct Operation 8
Starting the Fireplace for the First Time 9
Intermittent/Continuous Pilot 9
Switching from Intermittent (IPI) to Continuous Pilot (CPI) 9
Remote Operation 10
Display Overview 10
Listen for the “Beep” 10
Manual On-Off / Smart Thermostat / Standard Thermostat 11
Mode Controls (Flame, Blower, Light, Comfort Control) 12
Flame Height 12
Blower Speed 12
Mode Controls - continued 13
Accent Light 13
Comfort Control (rear burner) 13
Display Fahrenheit or Celsius 13
Low Battery Indicator 14
Transmitter Batteries 14
IFC Batteries 14
Battery Replacement 14
Battery Installation 14
Transmitter Battery Installation 14
Power Outages 14
Child-Proof Feature 15
Normal Operating Sounds 15
Normal Operating Odors 15
Maintaining Your Fireplace's Appearance. 16
Accent Light Replacement 16
Yearly Service Procedure 16
Barrier Removal 17
Glass Frame Removal and Installation 18
Glass Frame Removal and Installation (continued) 19
Glass Cleaning 20
Log Installation 21
Log Set Overview 21
Rear Log Installation 22
Right Log Installation 23
Left Log Installation 24
Left Twig Installation 25
Right Twig Installation 26
Ember Installation 27
Rock Wool Placement 27
Troubleshooting Table 28
Location of fuses: 28
Wiring Diagram 29
Replacement Parts List 29
CONDITIONS & EXCLUSIONS 30
IF WARRANTY SERVICE IS NEEDED: 30

Features

- Works During Power Outages (battery backup)
- GreenSmart™ 2 Thermostat / Remote Control
- Realistic "Wood Fire" Look
- Included Blower for Effective Heat Distribution
- Built-In Accent Light (night light)t
- Standing or Intermittent (GreenSmart) Pilot
- Convenient Operating Controls
- Variable-Rate Heat Output
- Low Maintenance

Heating Specifications

	Natural Gas	Propane
Approximate Heating Capacity (in square feet)*	Up to 950	Up to 950
Maximum BTU Input Per Hour	20,500	20,500

* Heating capacity will vary with floor plan, insulation, and outside temperature.

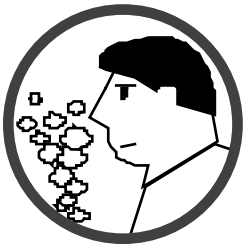

IF YOU SMELL GAS:

*** Do not light any appliance**
*** Extinguish any open flame**
*** Do not touch any electrical switch or plug or unplug anything**
*** Open windows and vacate building**
*** Call gas supplier from neighbor's house, if not reached, call fire department**

This unit must be installed by a qualified installer to prevent the possibility of an explosion. Your dealer will know the requirements in your area and can inform you of those people considered qualified. The room heater should be inspected and cleaned before use and at least annually by a qualified service person. More frequent cleaning may be required due to excessive lint from carpeting, bedding material, etc.

The instructions in this manual must be strictly adhered to. Do not use makeshift methods or compromise in the installation. Improper installation will void the warranty and safety listing.

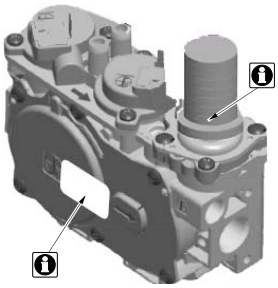

This heater is either approved for natural gas (NG) or for propane (LP). Burning the incorrect fuel will void the warranty and safety listing and may cause an extreme safety hazard. Direct questions about the type of fuel used to your dealer. Check for a label on the flame adjust knob on the gas control valve (this is the best place to check). You may also check for a label on the gas control valve body.

Contact your local building officials to obtain a permit and information on any installation restrictions or inspection requirements in your area. Notify your insurance company of this heater as well.

If the flame becomes sooty, dark orange in color, or extremely tall, do not operate the heater. Call your dealer and arrange for proper servicing.

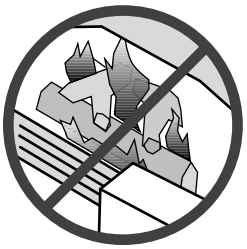

It is imperative that control compartments, screens, or circulating air passageways of the heater be kept clean and free of obstructions. These areas provide the air necessary for safe operation.

Do not operate the heater if it is not operating properly in any fashion or if you are uncertain. Call your dealer for a full explanation of your heater and what to expect.

Do not store or use gasoline or other flammable liquids in the vicinity of this heater.

Do not operate if any portion of the heater was submerged in water or if any corrosion occurs. Immediately call a qualified service technician to inspect the appliance and to replace any part of the control system and any gas control that has been under water.

Do not place clothing or other flammable items on or near the heater. Because this heater can be controlled by a thermostat there is a possibility of the heater turning on and igniting any items placed on or near it.

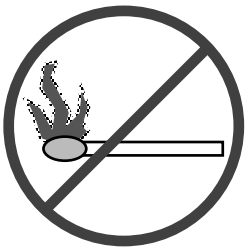

Light the heater using the built-in igniter. Do not use matches or any other external device to light your heater.

Allow the heater to cool before carrying out any maintenance or cleaning.

The viewing glass should be opened only for conducting service. Do not operate with cracked, broken, or removed glass.

Any safety screen or guard removed for servicing must be replaced prior to operating the heater.

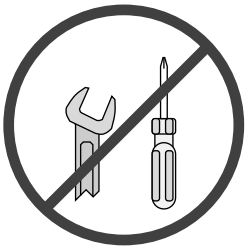

Never remove, replace, modify or substitute any part of the heater unless instructions are given in this manual. All other work must be done by a trained technician. Don't modify or replace orifices.

Operate the heater according to the instructions included in this manual.

If the main burners do not start correctly turn the gas off at the gas control valve and call your dealer for service.

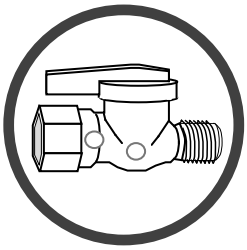

Instruct everyone in the house how to shut gas off to the appliance and at the gas main shutoff valve. The gas main shutoff valve is usually next to the gas meter or propane tank and requires a wrench to shut off.

This unit is not for use with solid fuel

Do not place anything inside the firebox (except the included fiber logs).

If the fiber logs become damaged, replace with Travis Industries media.

Do not throw this manual away. This manual has important operating and maintenance instructions that you will need at a later time. Always follow the instructions in this manual.

Children and adults should be alerted to the hazards of high surface temperature and should stay away to avoid burns or clothing ignition. Young children should be supervised when they are in the same room as the heater.

Travis Industries, Inc. grants no warranty, implied or stated, for the installation or maintenance of your heater, and assumes no responsibility of any consequential damage(s).

Proposition 65 Warning: Fuels used in gas, woodburning or oil fired appliances, and the products of combustion of such fuels, contain chemicals known to the State of California to cause cancer, birth defects and other reproductive harm.

California Health & Safety Code Sec. 25249.6

6 Operation

Before You Begin

- Read this entire manual before you use your new heater (especially the section "Safety Precautions" on pages 4 & 5). Failure to follow the instructions may result in property damage, bodily injury, or even death.

Remote Control Warnings

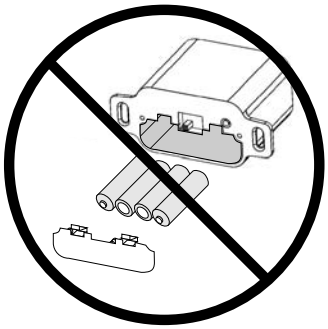

KEEP BATTERIES AND COVER INSTALLED AT ALL TIMES

The remote control system requires the batteries and battery cover to remain in place at all times. Once the batteries or cover are removed, the system may re-start in standing pilot mode. If this occurs when the heater is in Remote Mode, you will not be able to turn the heater off manually from the battery box.

If you need to replace dead batteries, make sure to **turn the appliance off** before removing the batteries.

NOTE: If the batteries go dead, the system will operate normally as long as household power (120v AC) is present.

The transmitter and IFC are radio frequency devices. Placing the transmitter in or near metal may severely reduce the signal range.

Turn off the main gas supply to the appliance during appliance installation or maintenance.

During appliance installation or maintenance or in case of remote control malfunction turn off the main gas supply.

Remote Set-Up

Verify the Switch is on "REMOTE"

The battery holder has a switch built into it (see **Figure 1**). This switch must remain in the REMOTE position for the remote to operate.

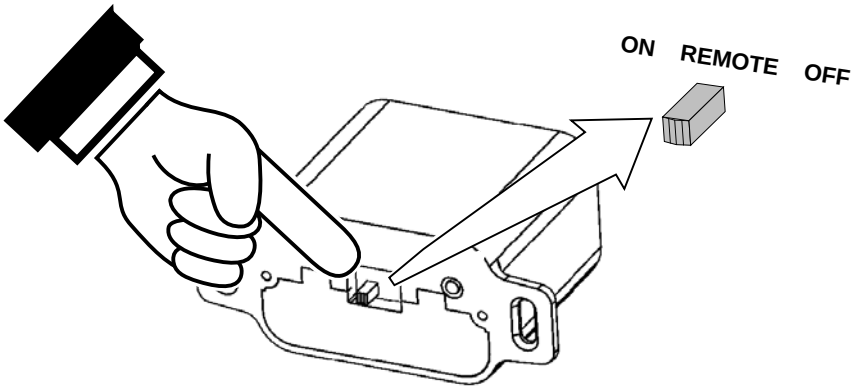

Figure 1

Synchronize the Transmitter to the IFC

The transmitter will need to be synchronized to the IFC (Integrated Fireplace Control) before the remote will work correctly. Synchronizing is done in the following two steps below (see **Figure 2**):

1. Press the PRG (Program) button on the battery box (IFC will beep 3 times).
2. Press the "ON" button on the transmitter (IFC will beep 3 times).

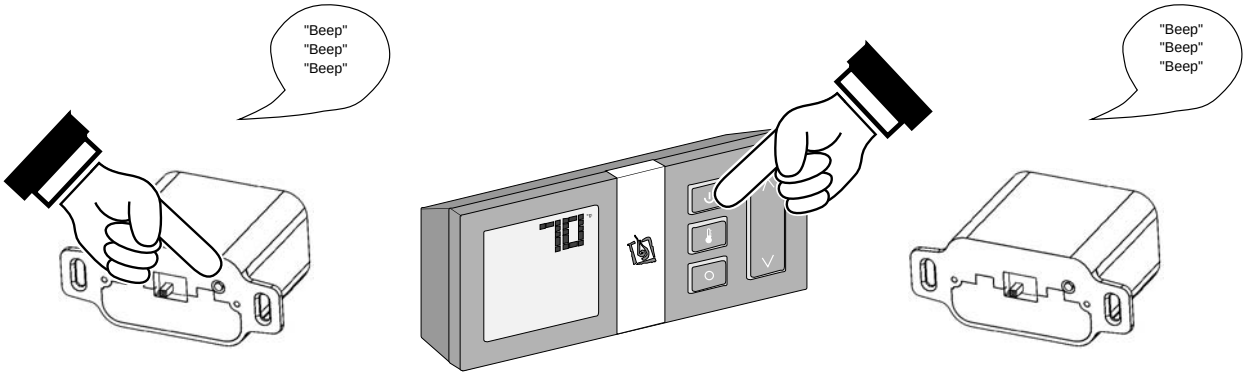

Figure 2

NOTE: If power is cut off to the IFC for an extended period of time, you may need to re-synchronize the remote.

Clearing the System Memory

This appliance uses an Integrated Fireplace Control (IFC) to store the unique code for the remote control. If you wish to clear the system memory, **MAKE SURE GAS IS TURNED OFF TO THE APPLIANCE** then press the PRG (Program) button for 10 seconds. The pilot will start to spark repeatedly, signifying all system memory has been cleared. The system will return to its original configuration: a remote will need to be synchronized; and, the system will operate under continuous pilot mode.

8 Operation

Location of Controls

The battery box is accessed by removing the barrier and concealment cover – see page 17.

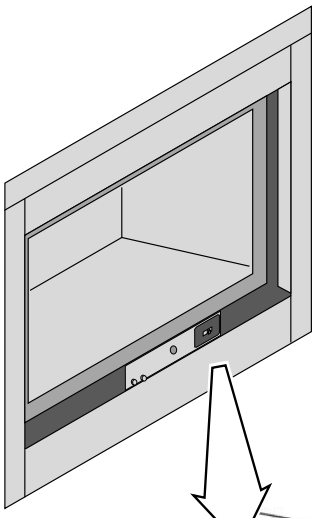

Most features will be controlled by the included remote.

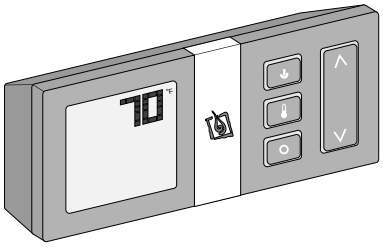

The battery holder / switch is on the right side, below the firebox.

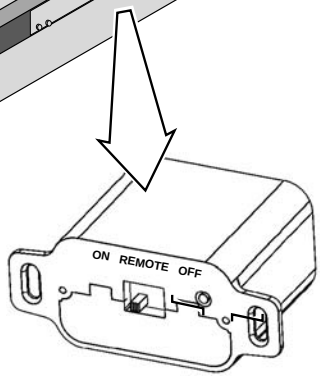

Direct Operation

The fireplace may be directly operated from the battery holder. The three positions are below (see **Figure 3**):

ON – Burner turns on (regardless of transmitter settings).

OFF – Burner turns off (regardless of transmitter settings).

REMOTE – Burner is controlled by the transmitter.

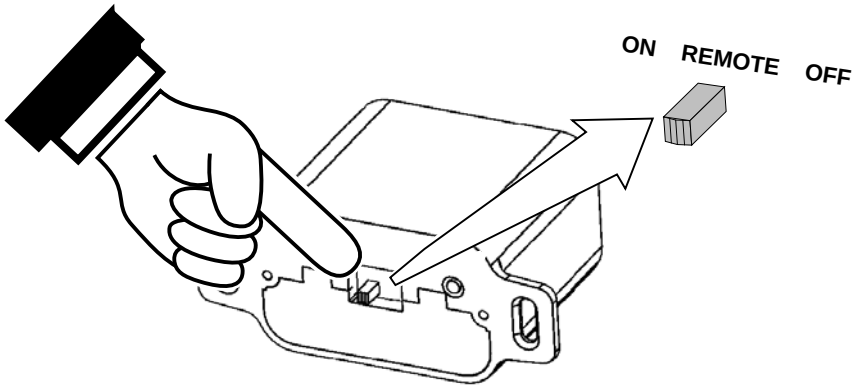

Figure 3

NOTE: When the battery holder switch is turned to ON or OFF, the mode settings (Flame Height, Comfort Control) will remain in the same state as before the switch was moved (i.e.: the IFC "remembers" the last setting). If you wish to adjust the mode settings use the transmitter mode button to adjust the settings (see "Mode Controls" on page 12). The thermostat and burner on/off operating functions will not work on the transmitter.

Starting the Fireplace for the First Time

- Burn the heater at a high setting with the blower off for an extended period (up to 48 hours). This will cure the painted surfaces. **Fumes** from the paint curing and oil burning off the steel will occur. This is normal. We recommend opening a window to vent the room.
- **Condensation** may appear on the glass each time you start the fireplace - this is normal.
- **Blue Flames** will occur on the fireplace when it first comes on. After fifteen minutes the flames will turn a more realistic yellow and orange color.
- Verify the power backup batteries are installed (see page 14).

Intermittent/Continuous Pilot

This heater may run with the pilot continuously running or in intermittent mode. For most homeowners, the intermittent mode is preferred (this saves fuel, doesn't give off un-needed heat). However, in some situations the homeowner may prefer to switch the heater to continuous pilot. The most typical reasons for switching to continuous pilot are:

- Very Cold Conditions – in very cold conditions you may notice that the burner does not light quickly, and the flames lift off the burner. If this is situation, we recommend you switch to continuous pilot. This will create a slight draft in the vent, allowing for the burner to light quickly and draft correctly.
- Excessive Condensation on Glass After Startup – certain installations may encounter excessive fogging on the window after startup (not just the first time the heater was started). This is an aesthetic condition that may be remedied by switching the heater to continuous pilot.
- Cold Glass or Heater Front – in very cold conditions you may notice that the heater front and glass become very cold. To remedy this, switch the heater to continuous pilot.
- Frequent On / Off Operation – if you are frequently turning the heater on and off, you may wish to leave it in continuous pilot. This allows the burner to turn on more quickly, without pilot ignition delay.

Switching from Intermittent (IPI) to Continuous Pilot (CPI)

The pilot mode on this appliance is adjusted using the remote. With the remote in the off position (thermostat off, manual off), follow the directions below to adjust the pilot mode.

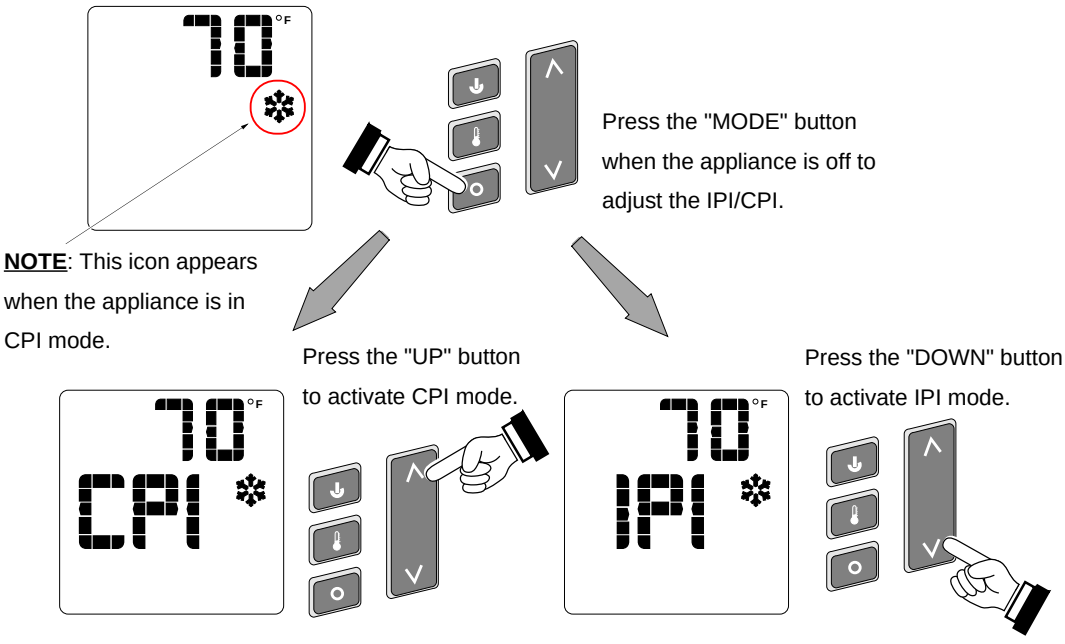

Figure 4

Remote Operation

When the switch on the battery holder is set to “REMOTE” the transmitter operates the fireplace. Once you understand how the transmitter works, you will be able to operate your fireplace quickly and easily.

Display Overview

The transmitter display has four main sections (see **Figure 5)**.

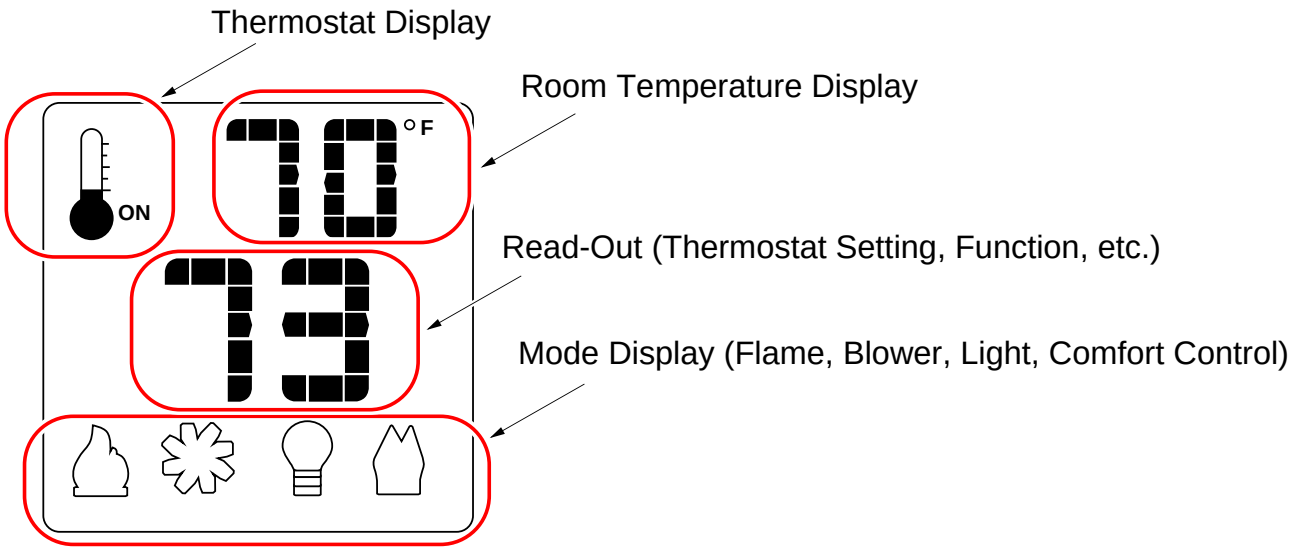

Figure 5

Listen for the “Beep”

Each time you press a button on the transmitter that controls the fireplace, a “beep” will come from the IFC. When you change thermostat target settings the IFC will not beep.

NOTE: When the batteries start to get low, the IFC will beep twice whenever a button is pressed. When the batteries are nearly depleted, the IFC will no longer beep. See “IFC Batteries” on page 14).

Manual On-Off / Smart Thermostat / Standard Thermostat

Use the thermostat button to cycle through the three thermostat settings (see Figure 6).

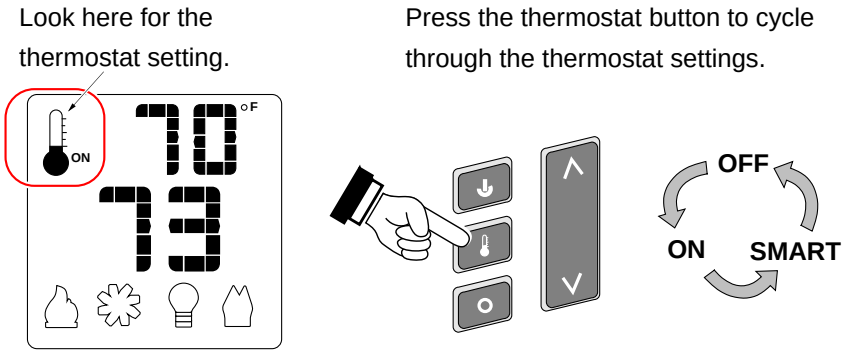

Figure 6

- **MANUAL ON/OFF** – The burner will turn on and off using the remote (see Figure 7). Press the On/Off button to control the burner. When off, the display will only show the current temperature.

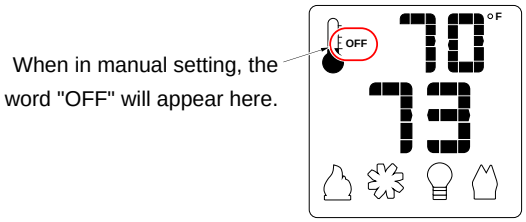

Figure 7

- **SMART THERMOSTAT** – While in smart thermostat, the transmitter will control the burner to achieve the target temperature (see Figure 8 below). Flame height will be adjusted up or down to allow operation without turning the burner on and off (also called “smart modulation”). To adjust the target temperature, press the UP and DOWN buttons until a suitable temperature is achieved.

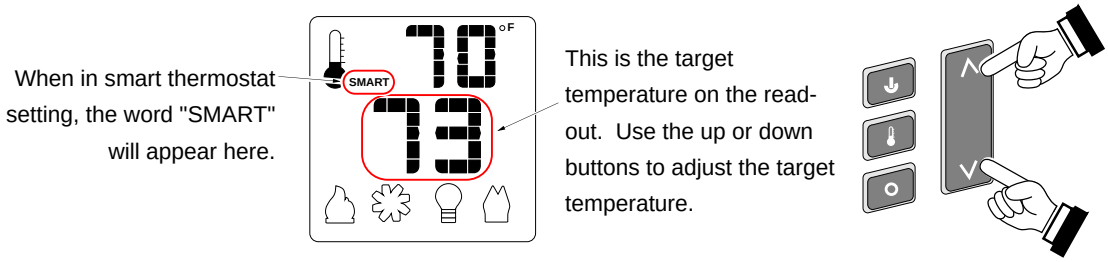

Figure 8

- **STANDARD THERMOSTAT** - While in standard thermostat setting, the transmitter will turn the burner on and off to achieve the target temperature (see Figure 9 below). To adjust the target temperature, press the up and down buttons until a suitable temperature is achieved.

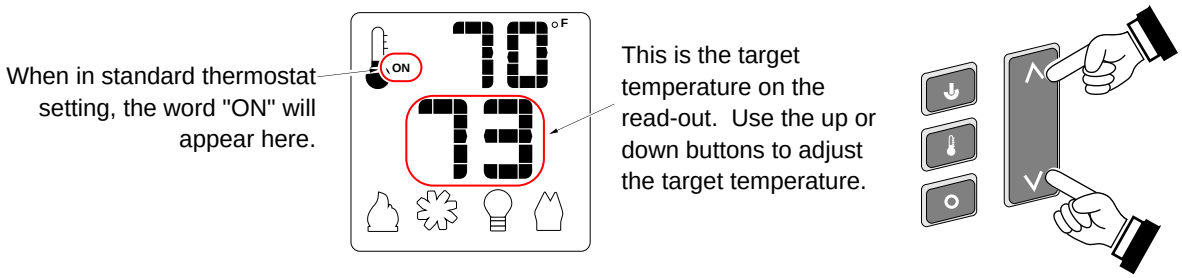

Figure 9

NOTE: If the transmitter batteries go dead while in thermostat setting (standard or smart), the appliance will shut off after approximately 24 hours.

Mode Controls (Flame, Blower, Light, Comfort Control)

Use the mode button to cycle through the four mode controls (see Figure 10 below).

Press the mode button to cycle through the mode settings.

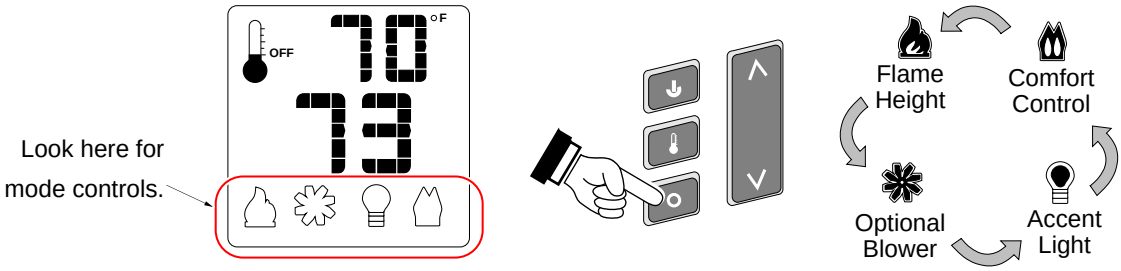

Figure 10

Flame Height

Flame height may be controlled using the UP and DOWN buttons when in Flame Height Mode (see Figure 11 below). The center display will display the 7 settings, from “OFF” to “HI” for full on.

NOTE: Flame height may not be adjusted if operating in Smart Thermostat setting.

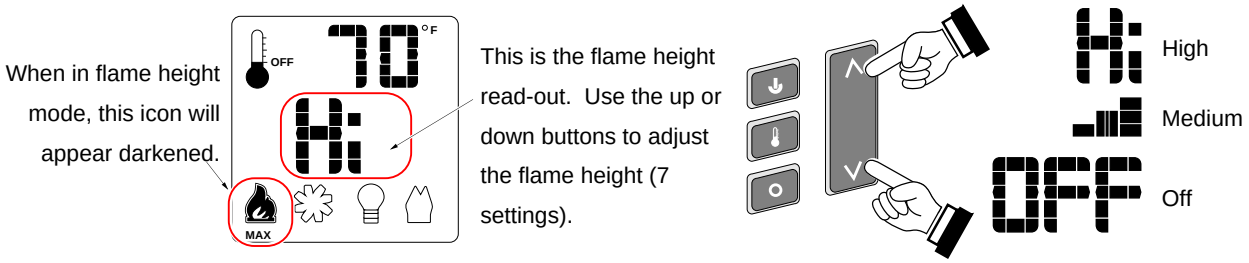

Figure 11

Blower Speed

The blower may be controlled using the up and down buttons when in Blower Speed Mode (see Figure 12). The center display will display the 7 settings, from “OFF” to “HI” for full on.

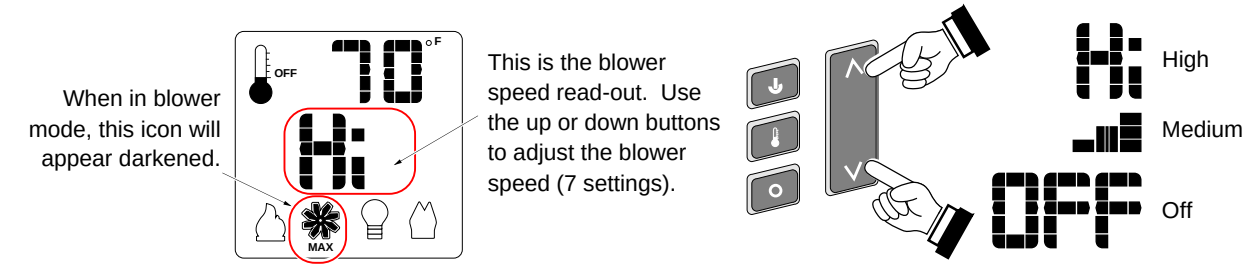

Figure 12

MANUAL MODE – BLOWER OPERATION

When in Manual Mode the blower will remain on, even if the burner is turned off and the heater cools.

Either manually turn the blower off, or turn off the heater by pressing the On/Off button.

Mode Controls - continued

Accent Light

The Accent Light (night light) inside the heater may be turned on and off using the up and down buttons when in Accent Light Mode (see Figure 13). The center display will display the 7 settings, from “OFF” to “HI” for full on.

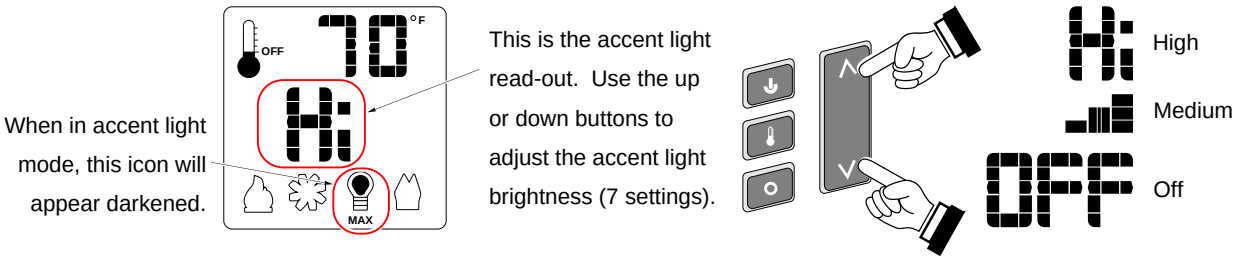

Figure 13

HINT: If you wish to leave the accent light on while turning the burner off, adjust the Flame Height to “OFF” (see above).

Comfort Control (rear burner)

The comfort control (rear burner) may be turned on and off using the up and down buttons when in Comfort Control Mode (see Figure 14). The center display will display either “ON” or “OFF”.

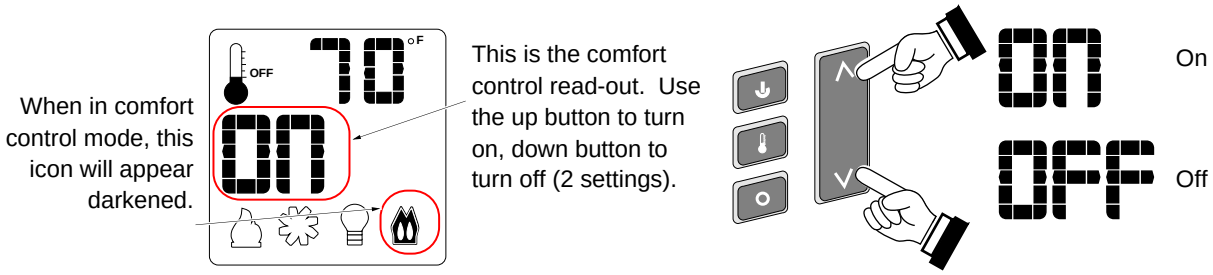

Figure 14

Display Fahrenheit or Celsius

- With the system in the “OFF” position, press both the MODE and THERMOSTAT buttons simultaneously to toggle between Fahrenheit (F) and Celsius (C).

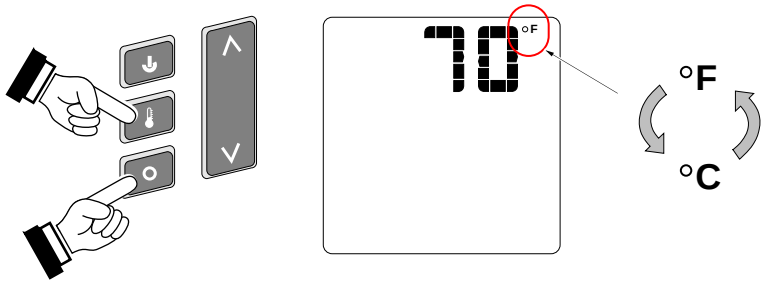

Figure 15

Low Battery Indicator

Transmitter Batteries

The transmitter has a battery-level indicator. When it indicates low battery voltage (see Figure 16 below), install three new AAA alkaline batteries into the transmitter (see “Transmitter Battery Installation” on page 14).

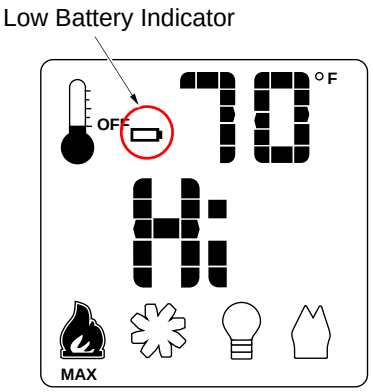

Figure 16

IFC Batteries

The IFC (Integrated Fireplace Control) will “beep” twice when a transmitter button is pressed when the batteries are low. Install four new AA alkaline batteries into the battery box when this occurs (see “Battery Installation” on page 14). In applications where the appliance is required to provide heat, we recommend replacing the batteries before each heating season.

Battery Replacement

Battery Installation

Install four AA batteries into the battery holder (see Figure 17 below). These batteries act as a power backup in case the household (AC) current goes out.

Transmitter Battery Installation

Install the three included AAA batteries into the remote.

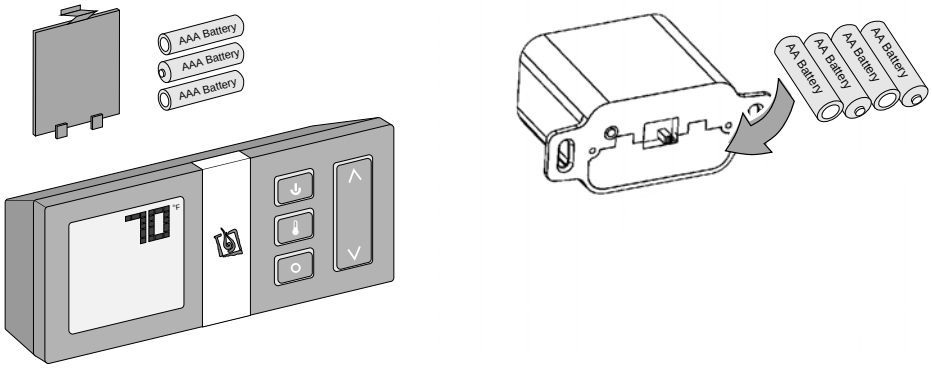

Figure 17

Power Outages

The remote will work if household current (AC power) is disconnected. The batteries inside the battery box will continue to power the heater but the accent light and blower will not operate.

Child-Proof Feature

The child proof feature disables the control buttons, preventing un-wanted use of the remote.

- Press both the MODE and UP buttons simultaneously to turn this feature on and off (see Figure 18 below).

HINT: This feature is especially useful while using the thermostat setting.

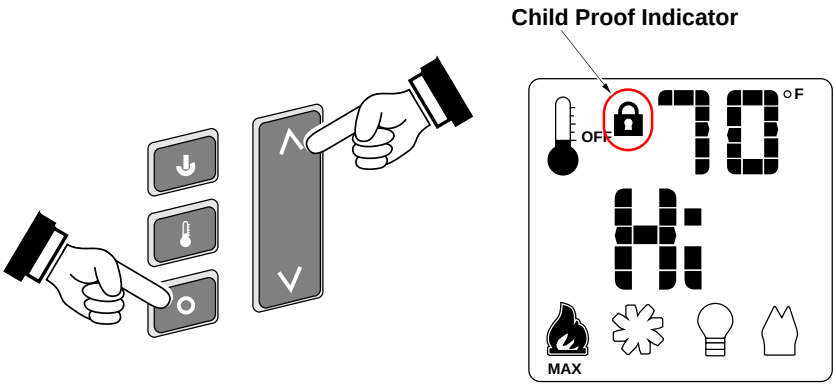

Figure 18

Normal Operating Sounds

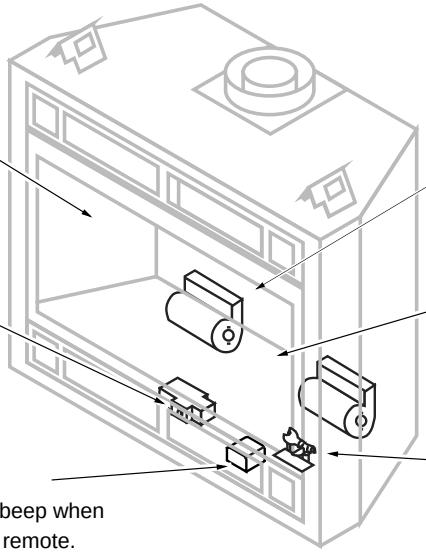

The appliance may creak with change of temperature -- THIS IS NORMAL.

Blowers
The optional blowers push heated air into the room. You will hear the sound of air movement increase as the speed of the blower is increased.

Gas Control Valve
As the gas control valve is turned on and off you will hear a dull clicking sound. This is the valve opening up and shutting down.

Extinction Pops
It is not unusual, especially on Propane (LP) appliances, to experience a "pop" when the burner is shut off.

GreenSmart Receiver
The GreenSmart receiver will beep when receiving commands from the remote.

Pilot Assembly
The pilot flame will make a clicking sound when starting up. When on, it will make a slight whisper sound.

Normal Operating Odors

This appliance has several areas that reach high temperatures. Dust or other particles on these areas may burn and create an odor. This is normal during start-up. You may notice the smell is more acute if the appliance was left idle for a long period.

16 Maintenance

Maintaining Your Fireplace's Appearance

Fingerprints or other marks left on the optional plated surface may become etched in place if they are not wiped clean prior to turning the fireplace on. Clean the plated surface with denatured alcohol and a soft cloth (with the fireplace cool). Other cleaners may leave a film that may become etched into the surface.

Accent Light Replacement

The accent lights in your fireplace provide additional lighting. The bulbs will burn out over time. To replace, follow the directions below:

- Shut off gas to the fireplace and let it cool for 15 minutes.
- Remove the glass (see page 18) and media.
- Replace the halogen bulbs with the following bulbs:
  (**NOTE**: .Take care to not touch the bulbs with your fingers – use foam packing or paper towel to hold the bulb):

35 Watt 120 Volt T4 Halogen Bulb (G6.35 Base)

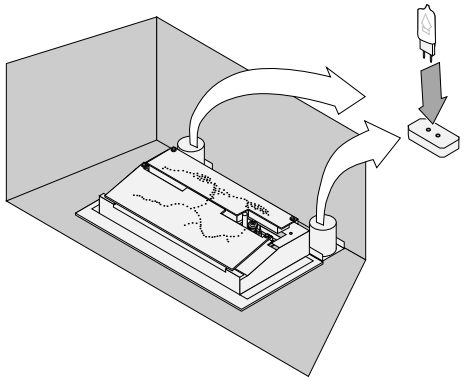

Yearly Service Procedure

- Failure to inspect and maintain the fireplace may lead to improper combustion and a potentially dangerous situation. We recommend the following procedures be done by a qualified technician.

1. Turn the pilot flame to continuous. It should touch approximately 3/8" of the top of the flame sensor. If it does not, contact your dealer for service.
2. Shut off gas to the fireplace and let it cool for 15 minutes. Remove the glass (see page 18).
3. Remove the logs (**NOTE: the logs are very fragile**). If severely deteriorated, replace. Check the logs for sooting. A small amount of soot along the bottom of the logs is normal. If excessive sooting is found, the fireplace will require adjustment. Contact your dealer.
4. Inspect the burner and remove any debris.
   - Make sure the burner is not warped, cracked, or damaged.
   - Check the firebox and area around the pilot to make sure there is no warping or damage.
   - If any problem is found, discontinue use and contact your dealer for service.
5. Replace the logs. Clean and replace the glass (see Glass Cleaning on page 20). If the glass is damaged, replace. Make sure the gasket along the perimeter of the glass contacts the face of the firebox and forms an air-tight seal. If it does not, re-align or replace the gasket to insure an air-tight seal.
6. Inspect the area behind the access door. Clean if necessary. Check the gas control valve and the gas lines. If damage is found, discontinue use and contact your dealer for service. Clean the air channels, ducts, and blower (if applicable).
7. Start the main burner. Inspect the main burner and pilot flame. After 15 minutes the flames should be orange/yellow and not touch the top of the firebox. If the pilot or main burners do not burn correctly, contact your dealer for service. Monitor blower operation.
8. Remove any debris or vegetation near the vent termination. Contact your dealer if any sooting or deterioration is found near the vent termination. Venting system should be examined by a qualified agency.

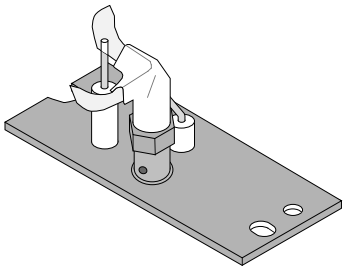

Barrier Removal

A barrier designed to reduce the risk of burns from the hot viewing glass is provided with this appliance and shall be installed for the protection of children and other at-risk individuals.

If the barrier becomes damaged, the barrier shall be replaced with the manufacturer's barrier for this appliance.

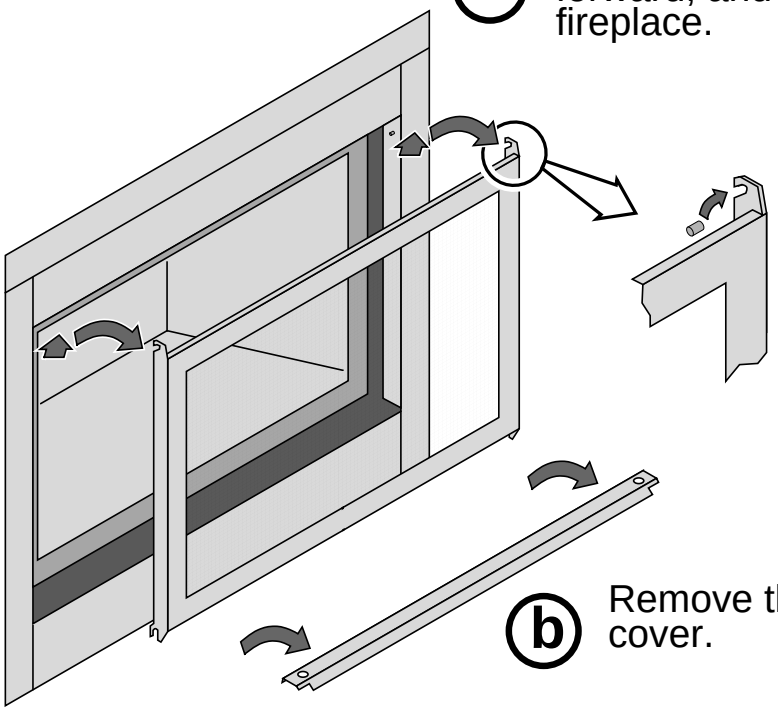

HINT FOR REPLACING THE BARRIER: Hold the barrier at an angle and insert the bottom slots first. Then pivot the barrier forward to engage the top hooks.

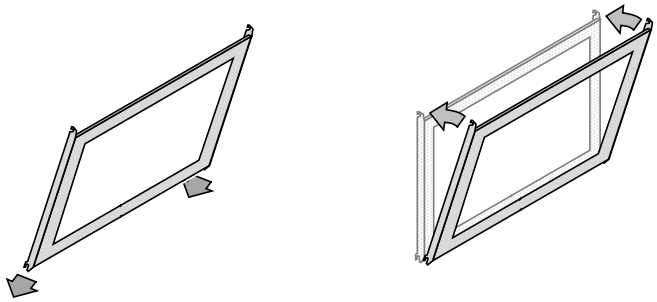

Glass Frame Removal and Installation

Warning: The appliance must be completely cool before removing the glass.

Warning: Do not strike or slam the glass.

Note: Remove the barrier before removing the glass (see previous page). Replace barrier after replacing the glass.

You may use the included glass latch tool to unlatch the glass latch. When done with the tool, place it on the base of the fireplace below the concealment cover.

a Open the four latches holding the glass frame in place (start with the bottom two) - follow the directions shown to the right.

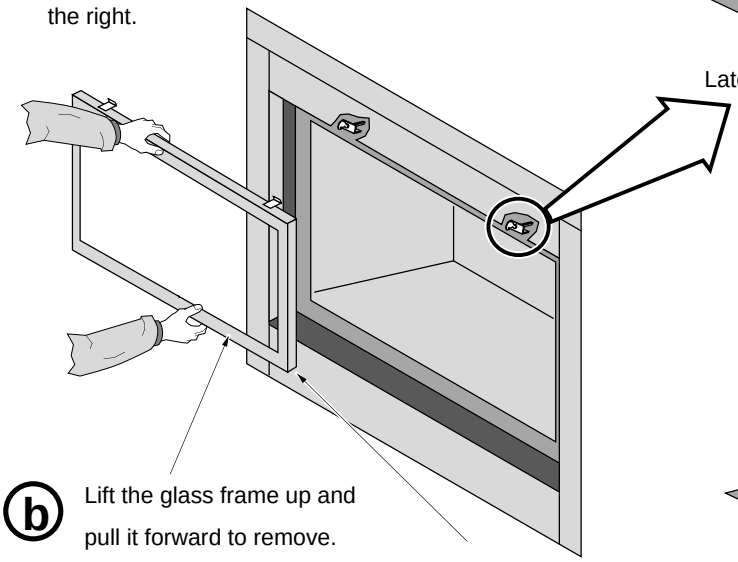

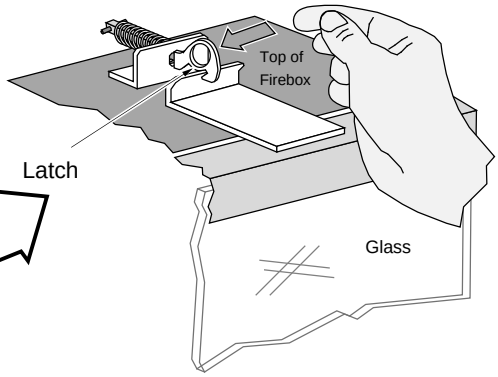

b Lift the glass frame up and pull it forward to remove.

NOTE:
You may need to lift the glass frame while re-attaching.

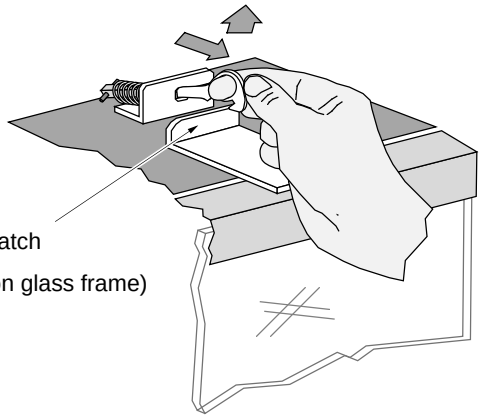

Re-Attaching the Glass Frame:

a) Hang the glass frame on the firebox.

b) While holding in place, attach the upper latches (follow the instructions above in reverse).

c) Lift the glass frame slightly and attach the lower latches.

NOTE: Make sure the glass frame is all the way in place - it should be flush with the front of the fireplace when installed.

Glass Frame Removal and Installation (continued)

The latch can come loose from the latch assembly. This occurs only when it is rotated. Follow the directions below to re-install the latch if it comes loose.

Hold the latch at an angle and insert it into the slot on the glass frame anchor.

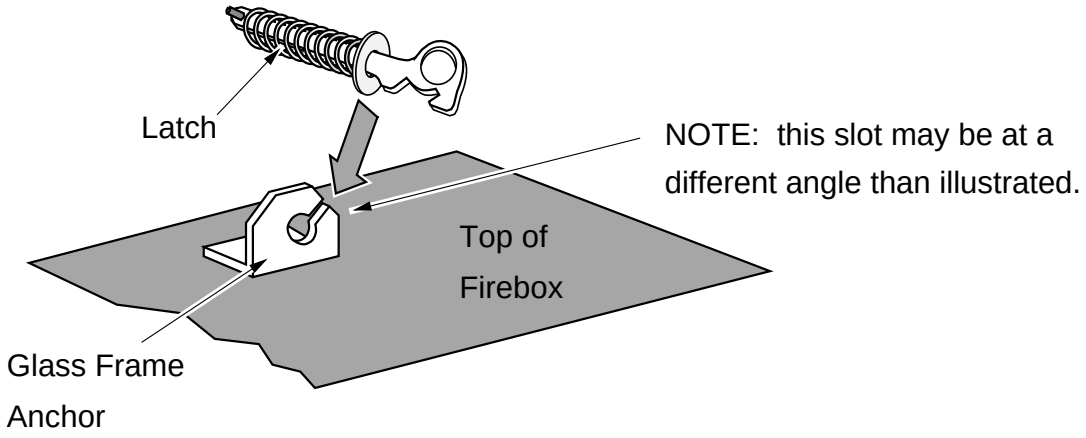

Note how the washer on the latch fits behind the flange on the glass frame anchor.

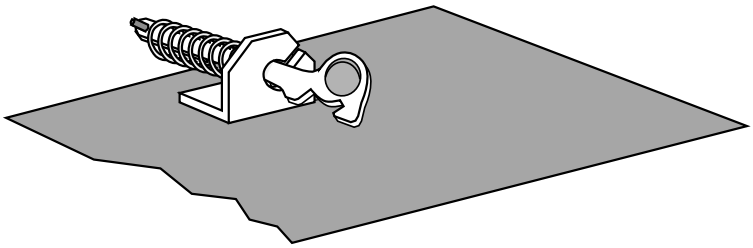

Once fully inserted, turn the latch until it is upright.

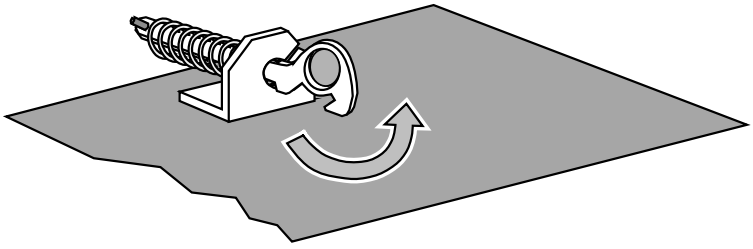

Glass Cleaning

The glass may be cleaned with a non-abrasive cleaner. To clean, remove the glass frame, place it on a non-scratching surface, and clean the inner and outer surface.

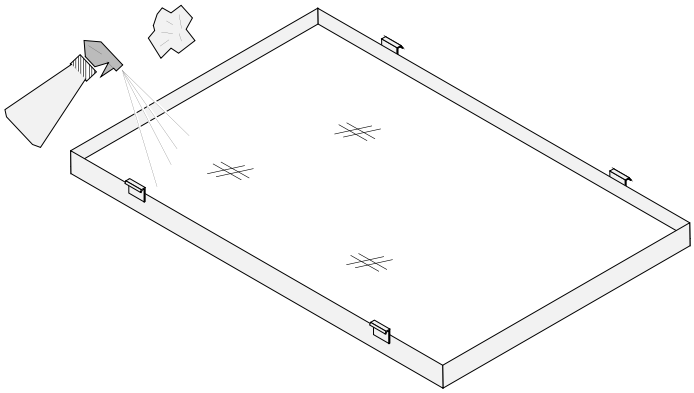

WARNING: do not operate the fireplace without the glass frame in place.

Log Installation

Log Set Overview

When installed, the logs should appear as shown below.

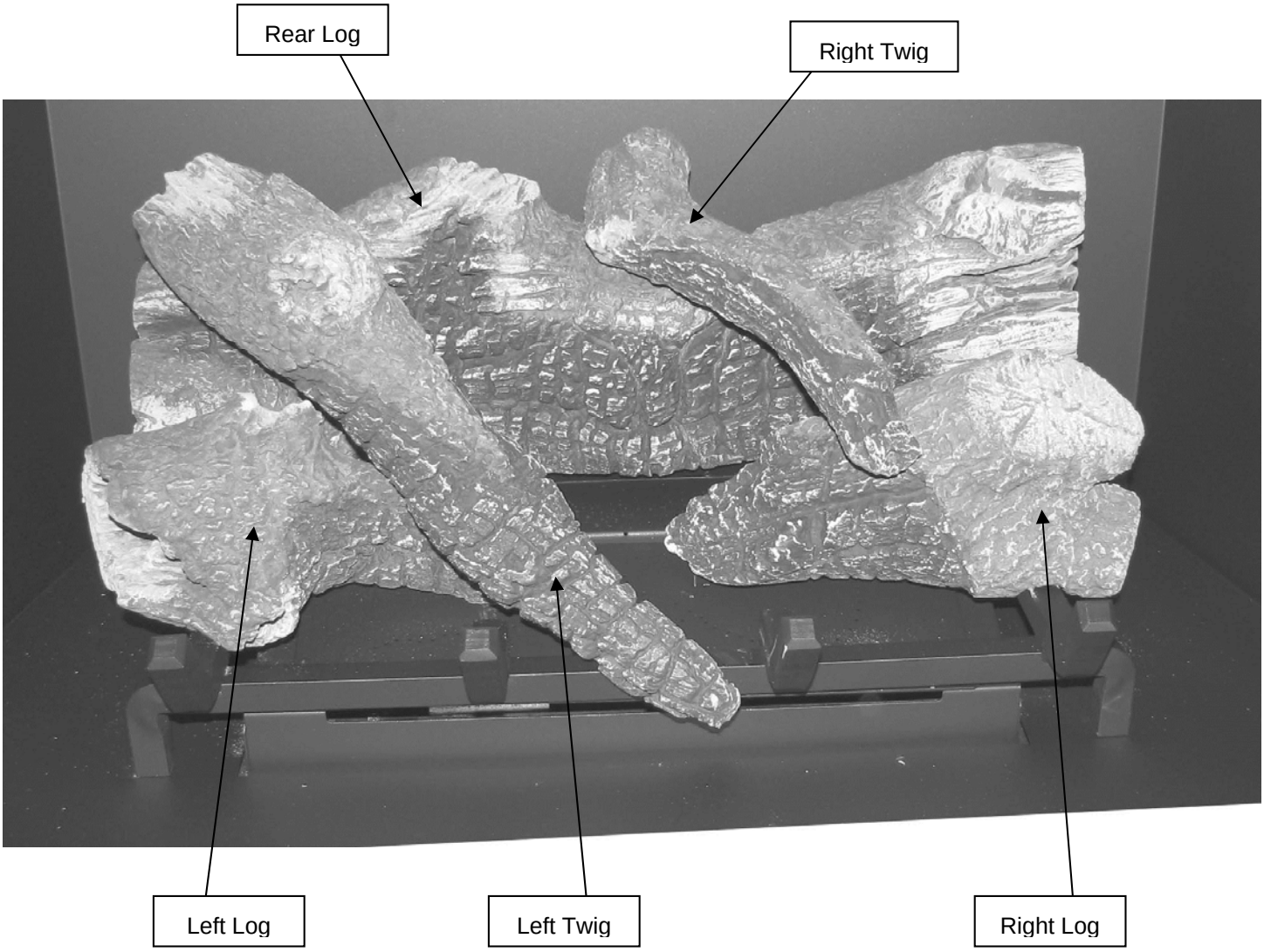

Rear Log Installation

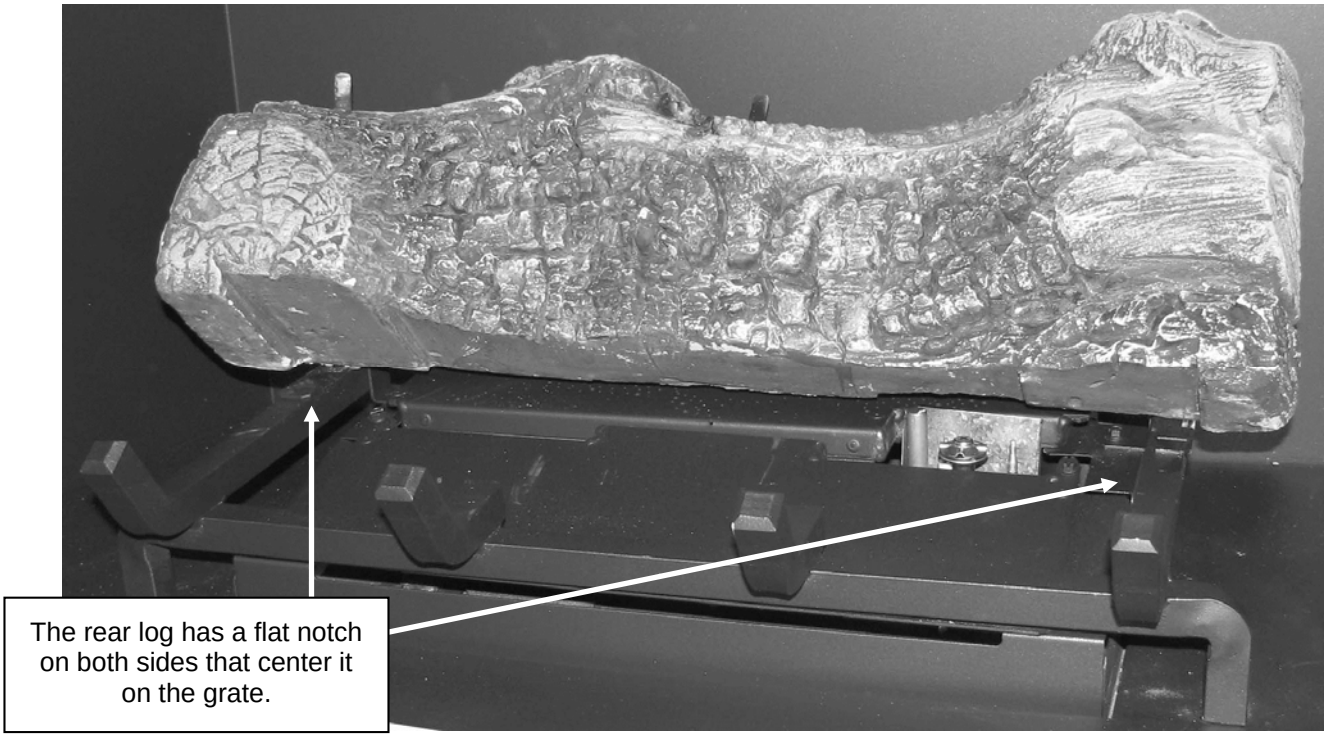

The rear log has a flat notch on both sides that center it on the grate.

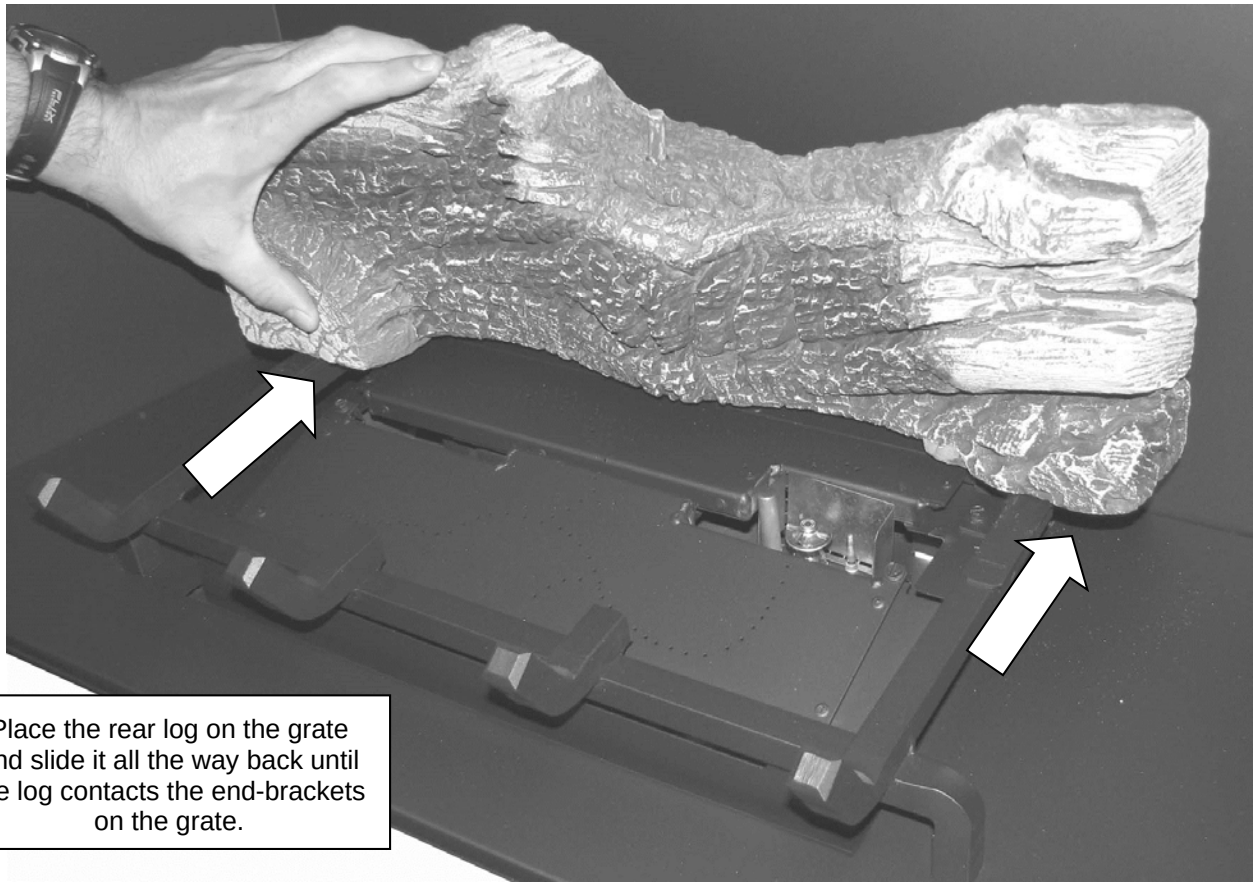

Place the rear log on the grate and slide it all the way back until the log contacts the end-brackets on the grate.

Right Log Installation

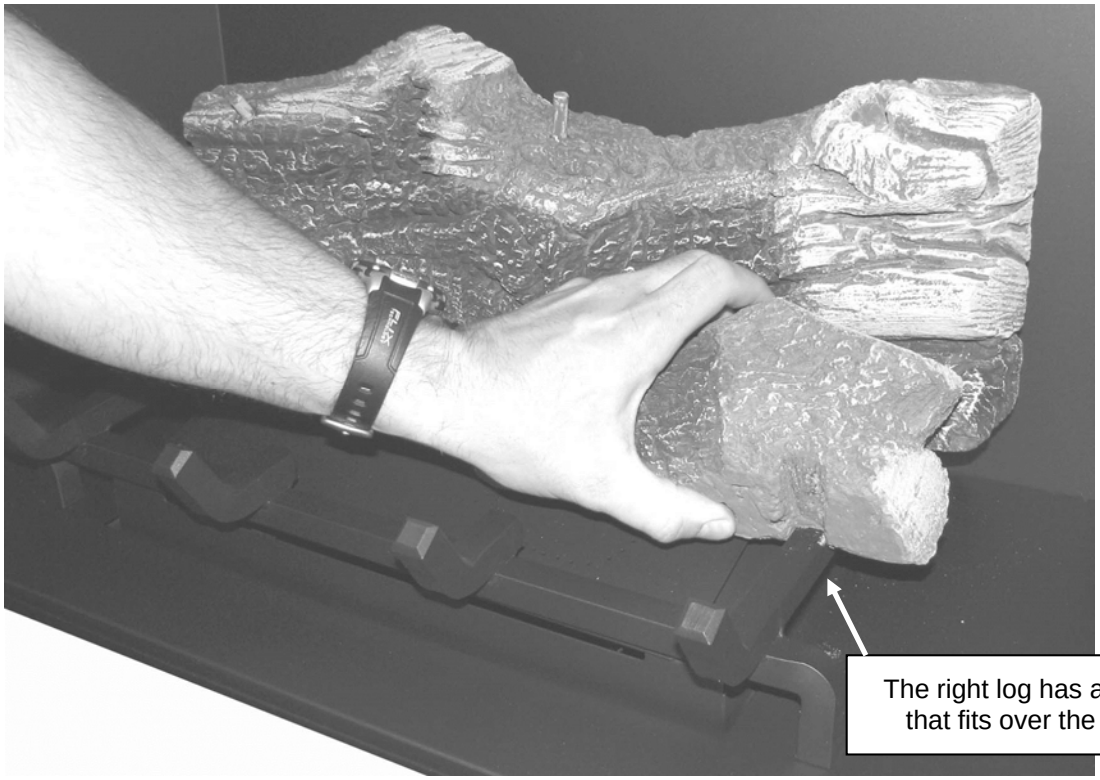

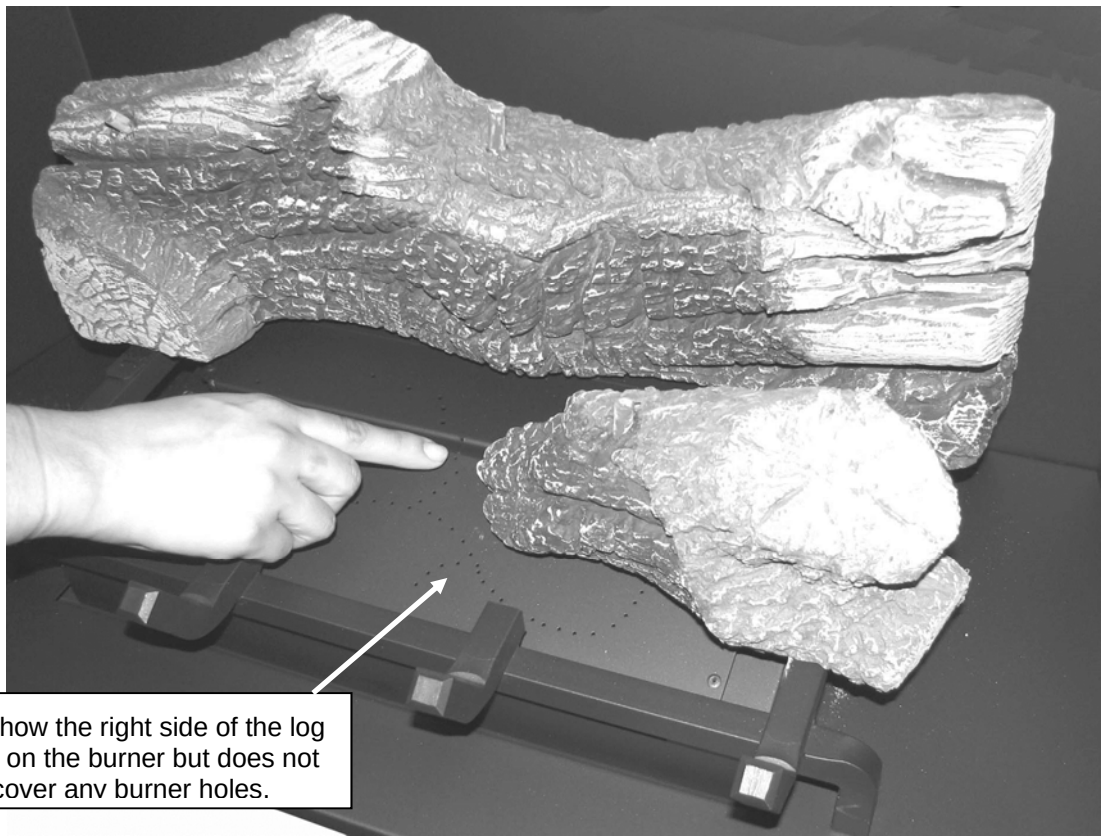

Left Log Installation

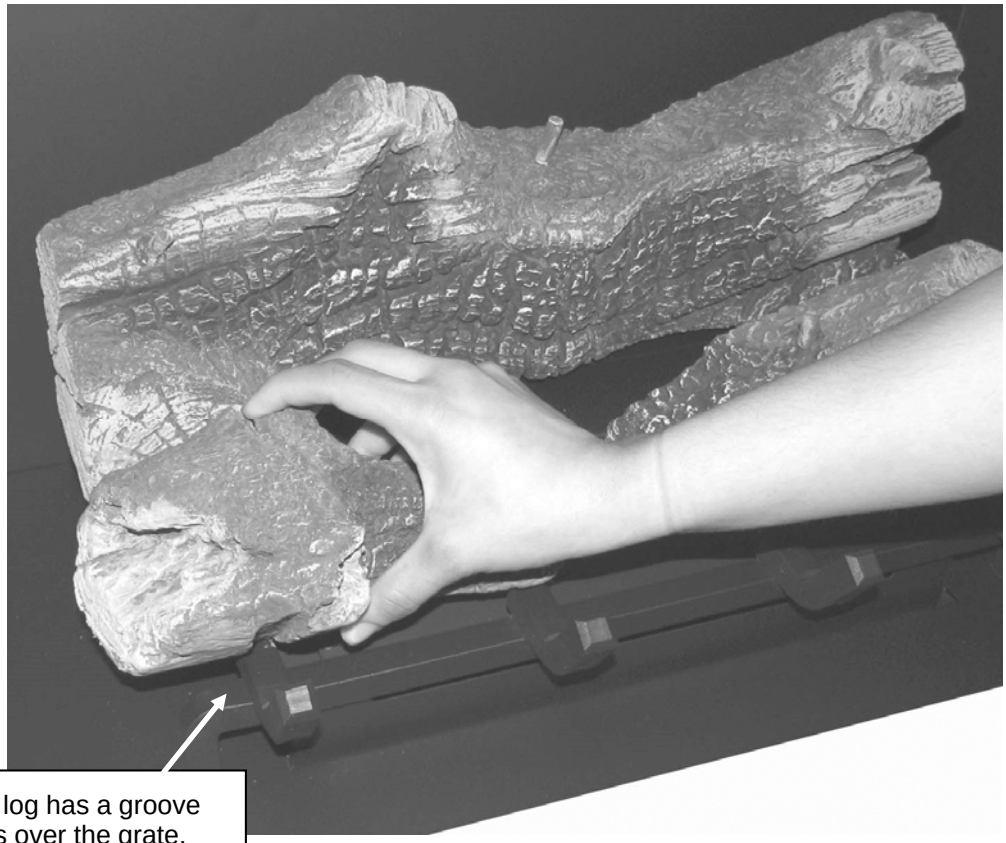

The left log has a groove that fits over the grate.

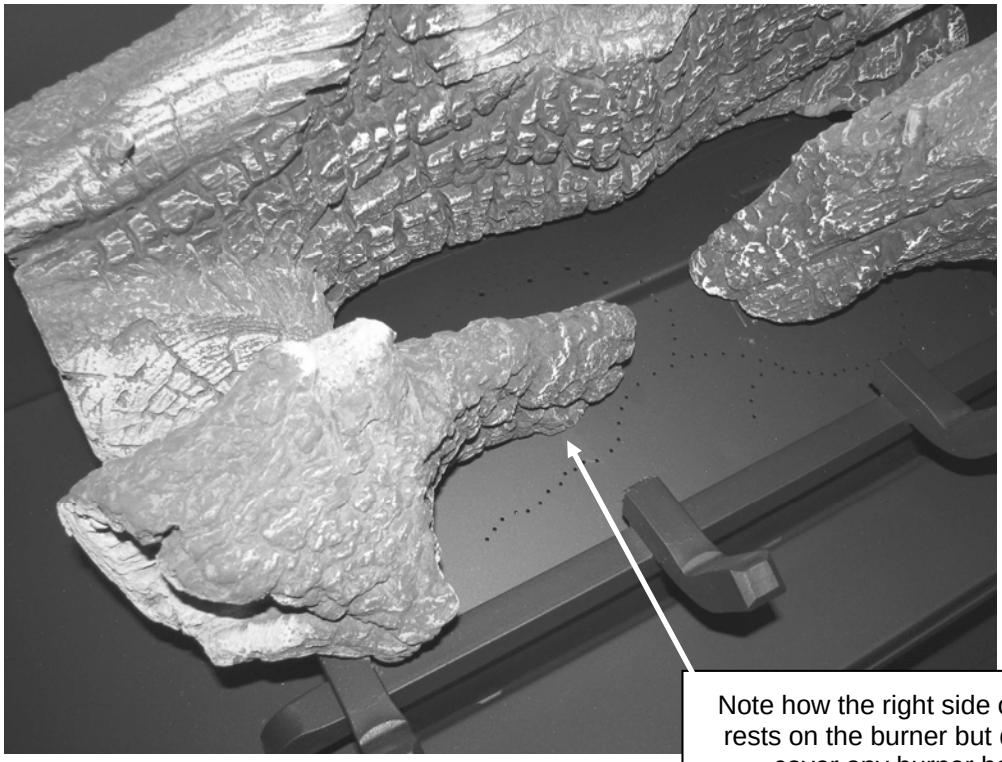

Note how the right side of the log rests on the burner but does not cover any burner holes.

Left Twig Installation

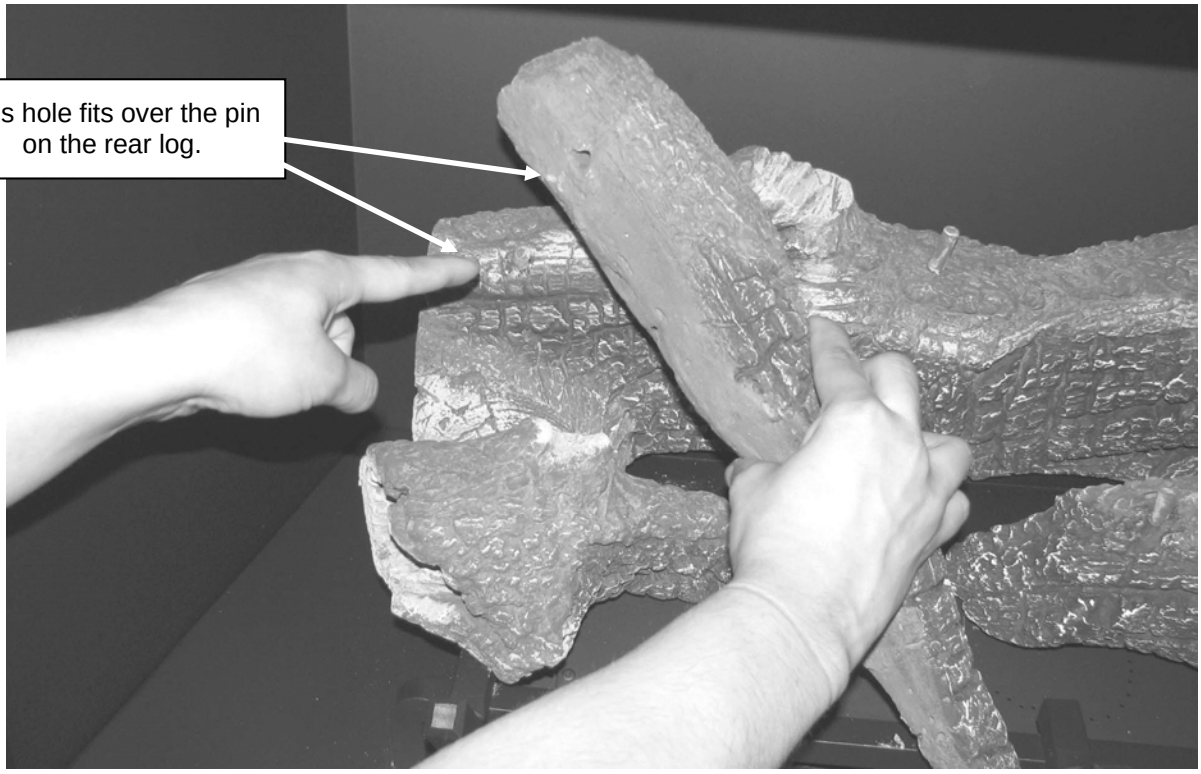

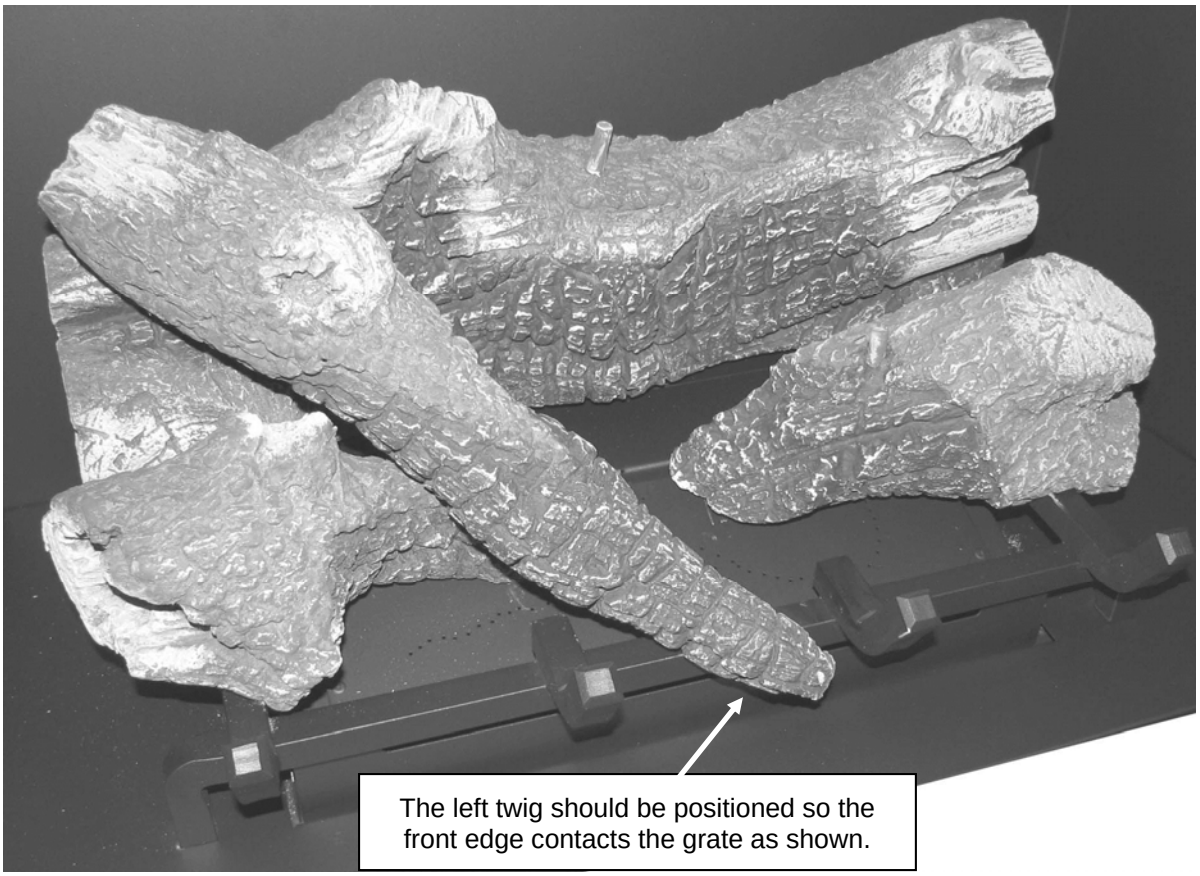

Right Twig Installation

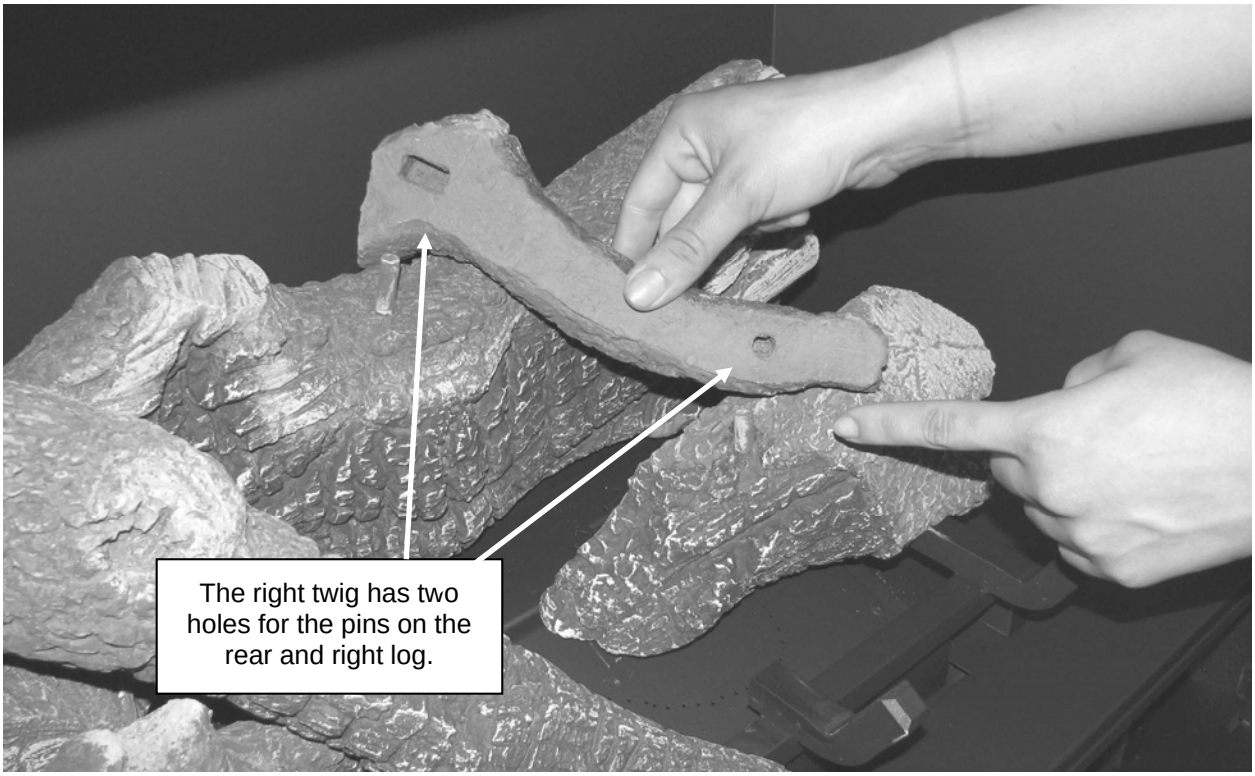

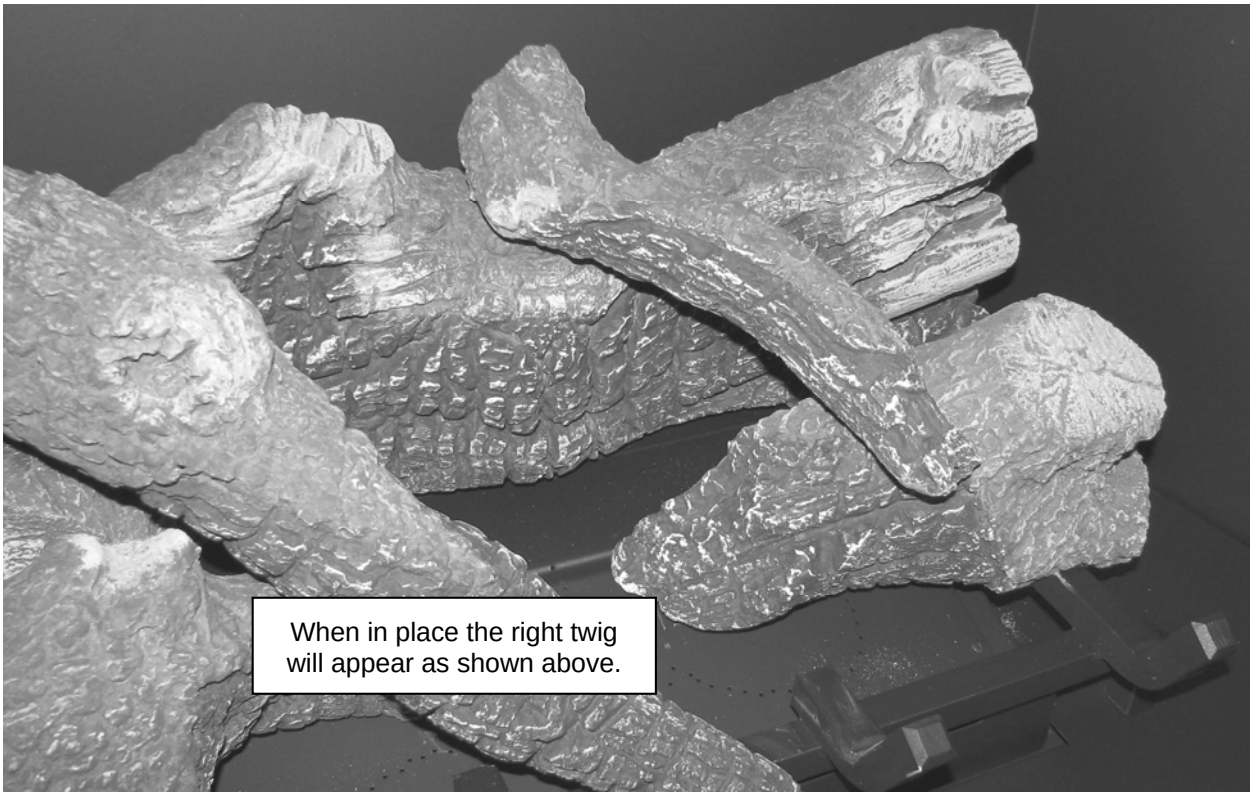

Ember Installation

A bag of embers is provided to further enhance the firebox. Place the embers on the firebox floor and on the burner. Do not place embers over any of the burner holes or air channels.

Rock Wool Placement

The included rock wool is placed on top of the burner to enhance the glow from the burner. **The rock wool works best when it is applied in a very thin, porous layer.** The best method for applying the rock wool is to brush it on to the burner. Compress a clump of rockwool between your thumb and forefinger. Use a stiff brush to apply a thin layer of rockwool fibers onto the burner. Do not use the entire bag of rockwool. Use only a small amount and save the remainder. Over-use of rockwool will diminish the glow and may cause sooting or other adverse conditions.

Troubleshooting Table

Problem:	Possible Cause:	Don't Call for Service Until You:
Main Burners Will Not Start	The battery box switch is turned to "OFF"	Turn the battery box switch to "ON"
	The remote control is not working correctly	See the remote control instructions
	The thermostat is disconnected or set too low	See "Thermostat Operation"
	No Propane in Tank	Check Tank Level
Appliance Beeps	Heater beeps once: The heater beeps once whenever a button on the remote is pressed	THIS IS NORMAL
	Heater beeps twice: The heater beeps twice whenever a button on the remote is pressed	The power backup batteries are low. Replace the 4 AA batteries in the battery box (see page 14).
Thermostat Does Not Work	The battery box switch is turned to "OFF"	Turn the battery box switch to "ON"
	The thermostat is set too low	Check thermostat
Blower Does Not Work	The fireplace is not getting electricity	Check the breaker switch
	The fireplace is not up to temperature	Let the fireplace burn for 10 minutes
	The blower fuse may be blown	Replace the fuse. See fuse location below.
Flames Are Too Blue	The fireplace has just been started	This is normal - see "Starting the Fireplace for the First Time"
	Improper air shutter adjustment	Adjust Air Shutter - contact your dealer
Flames Are Too Short (Under 6")	The flame height may be turned too low	Turn the flame height to "HI" - See "Adjusting the Flame Height"
Comfort Control Does not Work	The AA batteries may be dead	Replace the AA batteries (see page 14)
Thin Layer of Soot Covers the Glass	The logs or coals are placed incorrectly	See "Media (logs or stones) Installation"
	Improper air shutter adjustment	Adjust Air Shutter - contact your dealer
Accent Light Does Not Work	The bulb may be burned out.	See “Accent Light Replacement” on page 16
	The accent light fuse may be blown.	Replace the fuse. See fuse location below.

Location of fuses:

Fan Lights

Wiring Diagram

Caution: Label all wires prior to disconnection when servicing controls. Wiring errors can cause improper and dangerous operation.

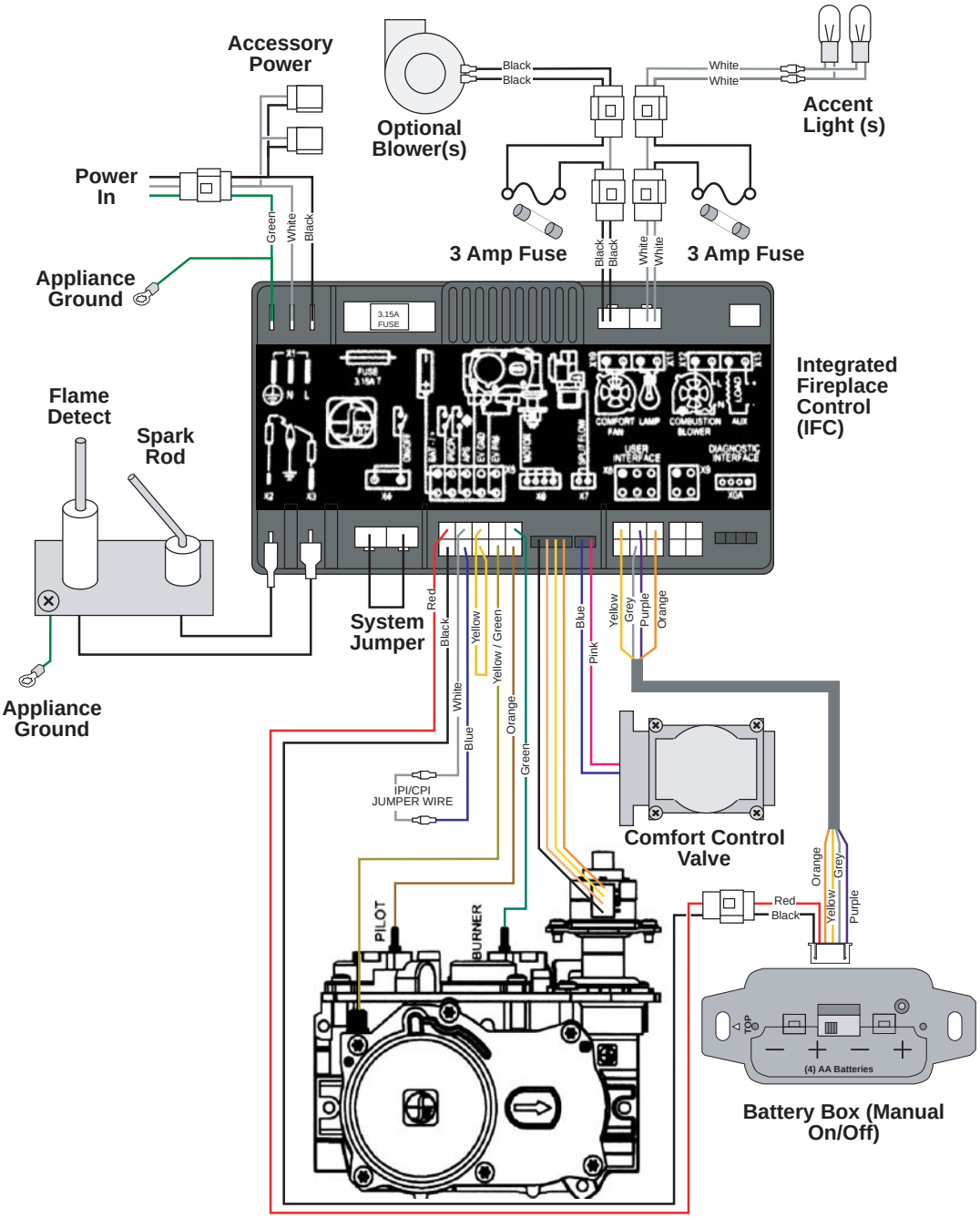

Replacement Parts List

Caution: Use only Travis Industries replacement parts. Do not use substitute materials.

Warning: Do not operate appliance with the glass front removed, cracked, or broken. Replacement of the glass should be done by a licensed or qualified service person.

Contact your local Travis Industries Dealer for a Replacement Parts List

30 Limited 7 Year Warranty

Register your TRAVIS INDUSTRIES, INC. Limited 7 Year Warranty online at **traviswarranty.com**, or complete the enclosed Warranty card and mail it within **ten (10)** days of the appliance purchase date to: TRAVIS INDUSTRIES, INC., 12521 Harbour Reach Drive, Mukilteo, WA 98275. TRAVIS INDUSTRIES, INC. warrants this gas appliance (appliance is defined as the equipment manufactured by Travis Industries, Inc.) to be defect-free in material and workmanship to the original purchaser from the date of purchase as follows:

Check with your dealer in advance for any costs to you when arranging a warranty call.
Mileage or service charges are not covered by this warranty. This charge can vary from store to store.

Component	Years 1 & 2 Parts & Labor	Years 3 Through 5 Parts & Labor	Years 6 & 7 Parts Only
Burner Assembly Burner Pan Assembly, Air Shutter Assembly, Main Burner Orifice	✓		
Electrical Assembly (within heater structure): Wiring harness, snap discs, rheostat speed control	✓		
Gas Control Assembly Adjustable control valve, fireplace controller, pilot assembly and pilot wiring	✓		
Glass Glass (breakage from thermal shock)	✓		
Media Embers, Logs, Stones, Crushed Glass	✓		
Gold, Nickel & Copper Plating Face & Door (see "Conditions and Exclusions" # 9)	✓		
Accessories Firebacks, Power Heat Ducts, Andirons, etc…	✓		
One-Way Freight Allowance One-way freight allowance on pre-authorized repair done at factory is covered.	✓	✓	
Convection Heat Exchanger Convection heat exchanger assembly	✓	✓	
Firebox Assembly Adjustable Air Restrictor, Pressure Relief Mechanisms, Glass Attachment Mechanism	✓	✓	✓

EXCLUDED COMPONENTS:

Paint, Gasketing, and Accent Light Bulbs

CONDITIONS & EXCLUSIONS

1. This new gas appliance must be installed by a qualified gas appliance technician. It must be installed, operated, and maintained at all times in accordance with the instructions in the Owner's Manual. Any alteration, willful abuse, accident, neglect, or misuse of the product shall nullify this warranty.
2. This warranty is nontransferable, and is made to the ORIGINAL purchaser, provided that the purchase was made through an authorized TRAVIS dealer.
3. Discoloration and some minor expansion, contraction, or movement of certain parts and resulting noise, is normal and not a defect and, therefore, not covered under warranty. The installer must ensure the appliance is burning as per the rating tag at the time of installation. Over-firing (operation above the listed BTU rate) of this appliance can cause serious damage and will nullify this warranty.
4. The warranty, as outlined within this document, does not apply to the chimney components or other Non-Travis accessories used in conjunction with the installation of this product. If in doubt as to the extent of this warranty, contact your authorized TRAVIS retailer before installation.
5. Travis Industries will not be responsible for inadequate performance caused by environmental conditions such as nearby trees, buildings, roof tops, wind, hills or mountains or negative pressure or other influences from mechanical systems such as furnaces, fans, clothes dryers, etc.
6. This Warranty is void if:

a. The unit has been operated in atmospheres contaminated by chlorine, fluorine or other damaging chemicals.
b. The unit is subject to submersion in water or prolonged periods of dampness or condensation.
c. Any damage to the unit, combustion chamber, heat exchanger or other components due to water, or weather damage which is the result of, but not limited to, improper chimney/venting installation.

7. Exclusions to this 7 Year Warranty include: injury, loss of use, damage, failure to function due to accident, negligence, misuse, improper installation, alteration or adjustment of the manufacturer's settings of components, lack of proper and regular maintenance, damage incurred while the appliance is in transit, alteration, or act of God.
8. This 7 Year warranty excludes damage caused by normal wear and tear, such as paint discoloration or chipping, worn or torn gasketing, corroded or cracked logs, embers, etc. Also excluded is damage to the unit caused by abuse, improper installation, modification of the unit, drilling of the orifices, or the use of fuel other than that for which the unit is configured. Units are shipped for natural gas and must be converted to propane using the included conversion kit. Confirm fuel configuration with your installer.
9. Damage to gold or nickel surfaces caused by fingerprints, scratches, melted items-, or other external sources left on the gold or nickel from the use of cleaners other than denatured alcohol is not covered in this warranty.
10. TRAVIS INDUSTRIES, INC. is free of liability for any damages caused by the appliance, as well as inconvenience expenses and materials. Incidental or consequential damages are not covered by this warranty. In some states, the exclusion of incidental or consequential damage may not apply.
11. This warranty does not cover any loss or damage incurred by the use or removal of any component or apparatus to or from the gas appliance without the express written permission of TRAVIS INDUSTRIES, INC. and bearing a TRAVIS INDUSTRIES, INC. label of approval.
12. Any statement or representation of TRAVIS products and their performance contained in TRAVIS advertising, packaging literature, or printed material is not part of this 7 year warranty.
13. This warranty is automatically voided if the appliance's serial number has been removed or altered in any way. If the appliance is used for commercial purposes, it is excluded from this warranty.
14. No dealer, distributor, or similar person has the authority to represent or warrant TRAVIS products beyond the terms contained within this warranty. TRAVIS INDUSTRIES, INC. assumes no liability for such warranties or representations.
15. Travis Industries will not cover the cost of the removal or re-installation of hearths, facing, mantels, venting or other components.
16. If for any reason any section of this warranty is declared invalid, the balance of the warranty remains in effect and all other clauses shall remain in effect.
17. THIS 7 YEAR WARRANTY IS THE ONLY WARRANTY SUPPLIED BY TRAVIS INDUSTRIES, INC., THE MANUFACTURER OF THE APPLIANCE. ALL OTHER WARRANTIES, WHETHER EXPRESS OR IMPLIED, ARE HEREBY EXPRESSLY DISCLAIMED AND PURCHASER'S RECOURSE IS EXPRESSLY LIMITED TO THE WARRANTIES SET FORTH HEREIN.

IF WARRANTY SERVICE IS NEEDED:

1. If you discover a problem that you believe is covered by this warranty, you MUST REPORT it to your TRAVIS dealer WITHIN 30 DAYS, giving them proof of purchase, the purchase date, and the model name and serial number.
2. Travis Industries has the option of either repairing or replacing the defective component.
3. If your dealer is unable to repair your appliance's defect, he may process a warranty claim through TRAVIS INDUSTRIES, INC., including the name of the dealership where you purchased the appliance, a copy of your receipt showing the date of the appliance's purchase, and the serial number on your appliance. At that time, you may be asked to ship your appliance, freight charges prepaid, to TRAVIS INDUSTRIES, INC. TRAVIS INDUSTRIES, INC., at its option, will repair or replace, free of charge, your TRAVIS appliance if it is found to be defective in material or workmanship within the time frame stated within this 7 year warranty. TRAVIS INDUSTRIES, INC. will return your appliance, freight charges (years 1 to 5) prepaid by TRAVIS INDUSTRIES, INC., to your regional distributor, or dealership.
4. Check with your dealer in advance for any costs to you when arranging a warranty call. Mileage or service charges are not covered by this warranty. This charge can vary from store to store.

Accent Light Replacement 16
Barrier Removal 17
Battery Replacement 14
Before You Begin 6
Child-Proof Feature 15
Direct Operation 8
Display Fahrenheit or Celsius 13
Glass Cleaning 20
Glass Frame Removal and Installation 18
Installation Warnings 2
Intermittent/Continuous Pilot 9
Location of Controls 8
Log Installation 21
Low Battery Indicator 14
Maintaining Your Fireplace's Appearance 16
Normal Operating Odors 15
Normal Operating Sounds 15
Power Outages 14
Remote Control Warnings 6
Remote Operation 10
Remote Set-Up 7
Replacement Parts List 29
Rock Wool Placement 27
Starting the Fireplace for the First Time 9
Troubleshooting Table 28
Wiring Diagram 29
Yearly Service Procedure 16